SET IL BAGNO ALESSI ONE

Bathtub
semi-recessed version
24497.0

TECHNICAL DATA

Order no.	24497.0
Certified to	EN 14516 (EN 198), EN 232, EN 12764
Dimensions	2030 x 1020 mm
Depth	460 mm
Use capacity	230 litre (total: 300 litre)
Specification	Bathtub made of sanitary acrylic of 4-5 mm Semi-recessed version, with front panel Only to combine with furniture panel With aluminium frame Charge 000 – without whirl system, without waste and overflow
Special specification	Bathtub with whirl system, with sensor control: Charge 675 – Whirlpool with air and hydro massage and LED light Charge 695 – Whirlpool with air and hydro massage, disinfection system and LED light Bathtub with whirl system, with remote control: Charge 056 – Whirlpool with surround sound system, air and hydro massage and disinfection system, hydro heating and LED light Charge 057 – Whirlpool with surround sound system, air and hydro massage and disinfection system, hydro heating, LED light and cold mist function

Weight	Charge 000 – 41,0 kg Charge 056-695 – 71,0 kg
Accessories excl.	Furniture panel set, 2 pieces, symmetric, with center cut-out for bathtub, width 2400 mm, order no. 45851.1, width 4000 mm, order no. 45851.4 asymmetric, width 3200 mm, cut-out for bathtub left, order no. 45851.2, cut-out for bathtub left, order no. 45851.3
Mounting acc. incl.	Charge 056-695 – waste and overflow, chromed Flex-pipe 1m, order no. 29443.9
Mounting acc. excl.	Charge 000 – waste and overflow, chromed order no. 29445.7 Charge 000 – combined water inlet and overflow, chromed, order no. 29445.8 Charge 056-695 – combined water inlet and overflow, chromed, order no. 29449.8
Colours sanitary acrylic	000 – White 300 – White anti-bacterial
Colours wooden panel	630 – Noce canaletto, surface real wood veneer 631 – White, surface lacquered

TECHNICAL DRAWINGS / S 1 : 40

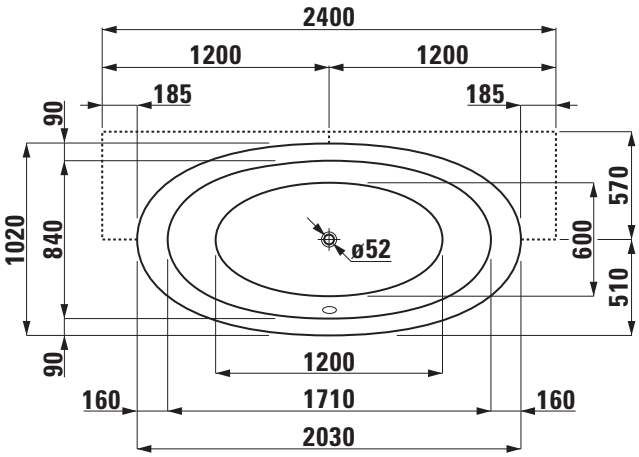

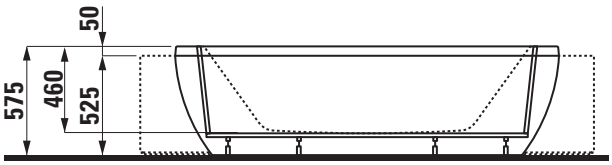

LAUFEN