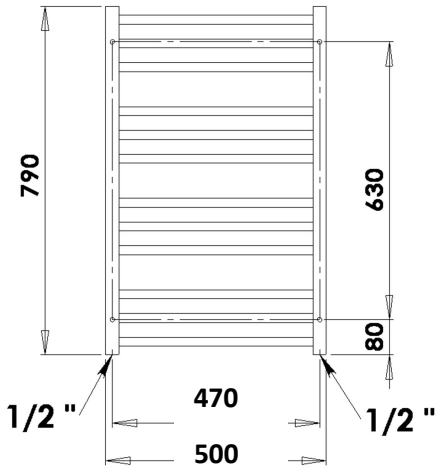
790
630
80
1/2 "
470
1/2 "
500

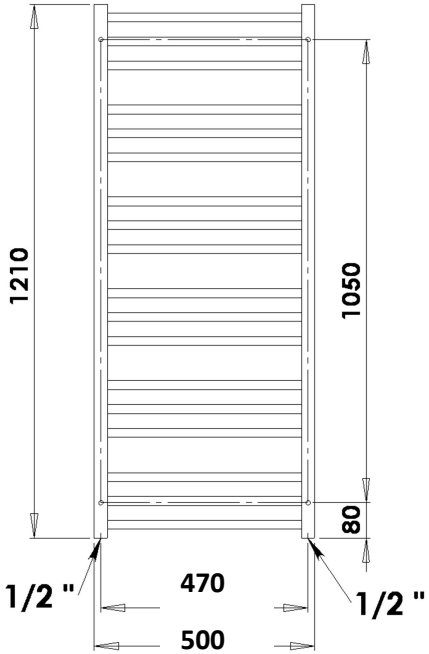
1210
1050
80
1/2 "
470
1/2 "
500

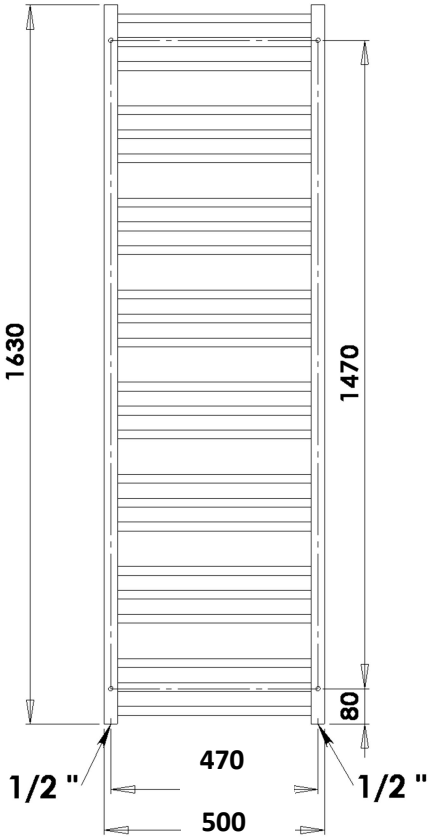
1630
1470
80
1/2 "
470
1/2 "
500

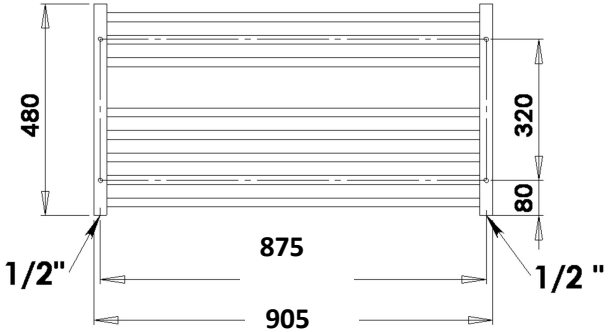
480
320
80
1/2"
875
1/2 "
905

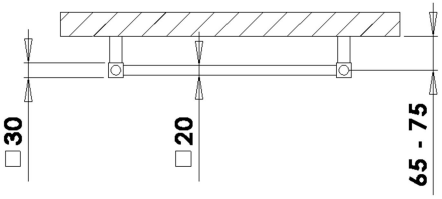
□30
□20
65 - 75

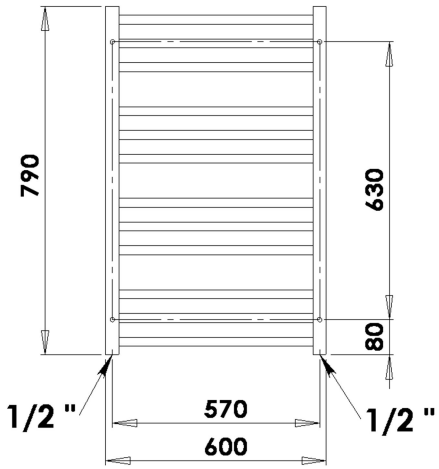
790
630
80
1/2 "
570
600
1/2 "

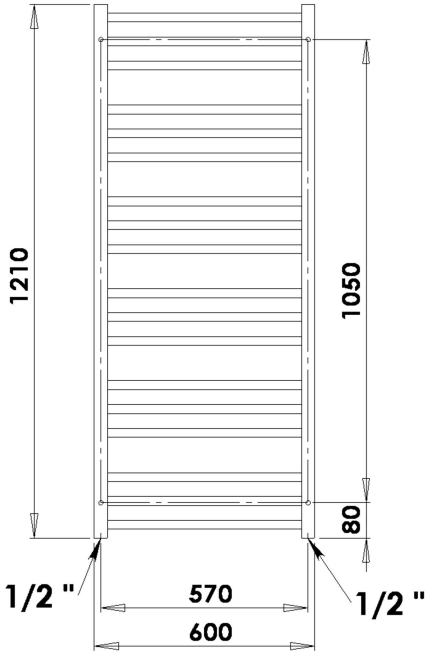
1210
1050
80
1/2 "
570
600
1/2 "

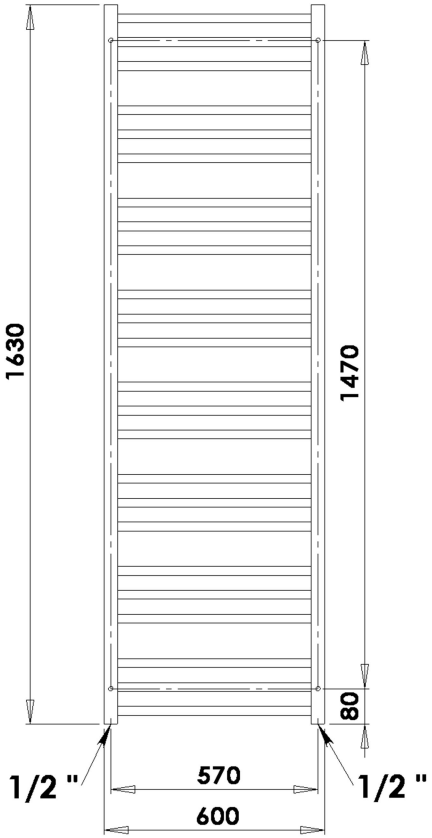
1630
1470
80
1/2 "
570
600
1/2 "

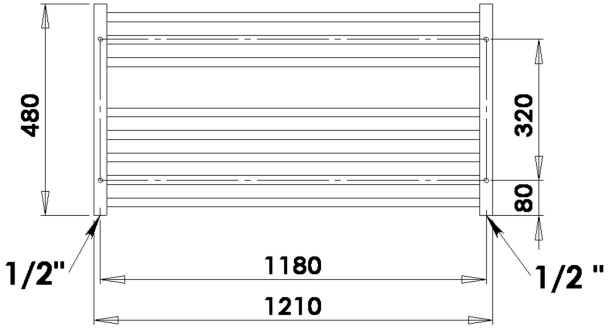
480
320
80
1/2"
1180
1210
1/2 "

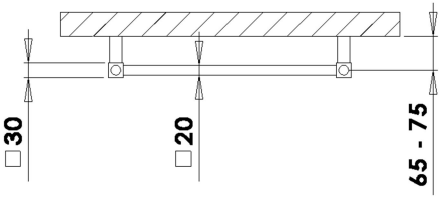
□30
□20
65 - 75